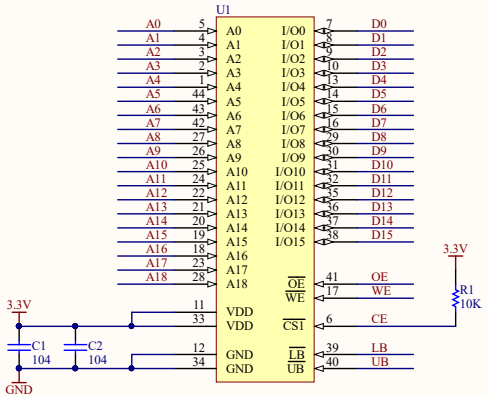

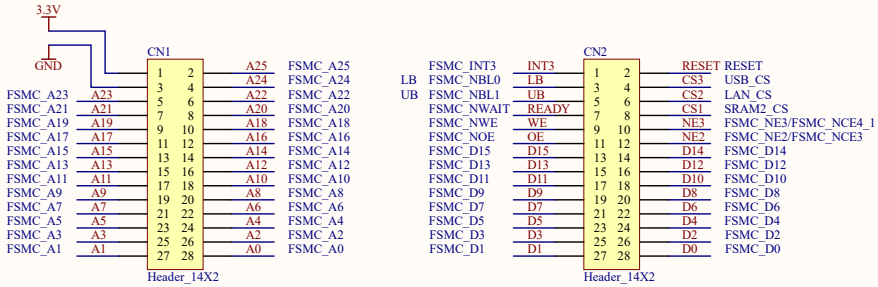

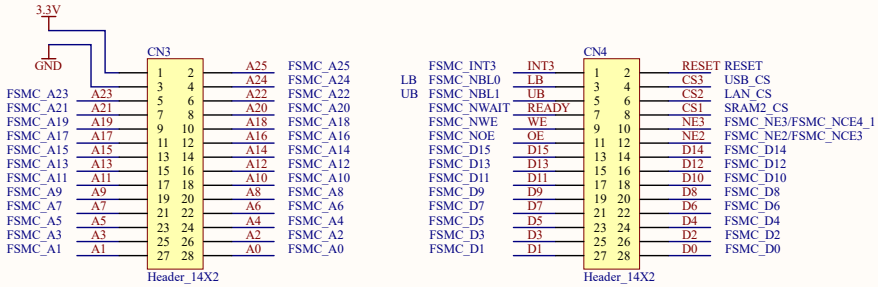

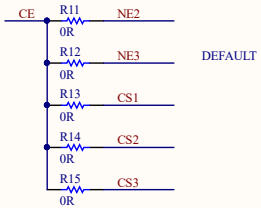

Title		
Size A3	Number	Revision
Date: 2018/3/1	Sheet of	
File: D:\SVN\..\IS62WV51216BLL.SchDoc	Drawn By:	