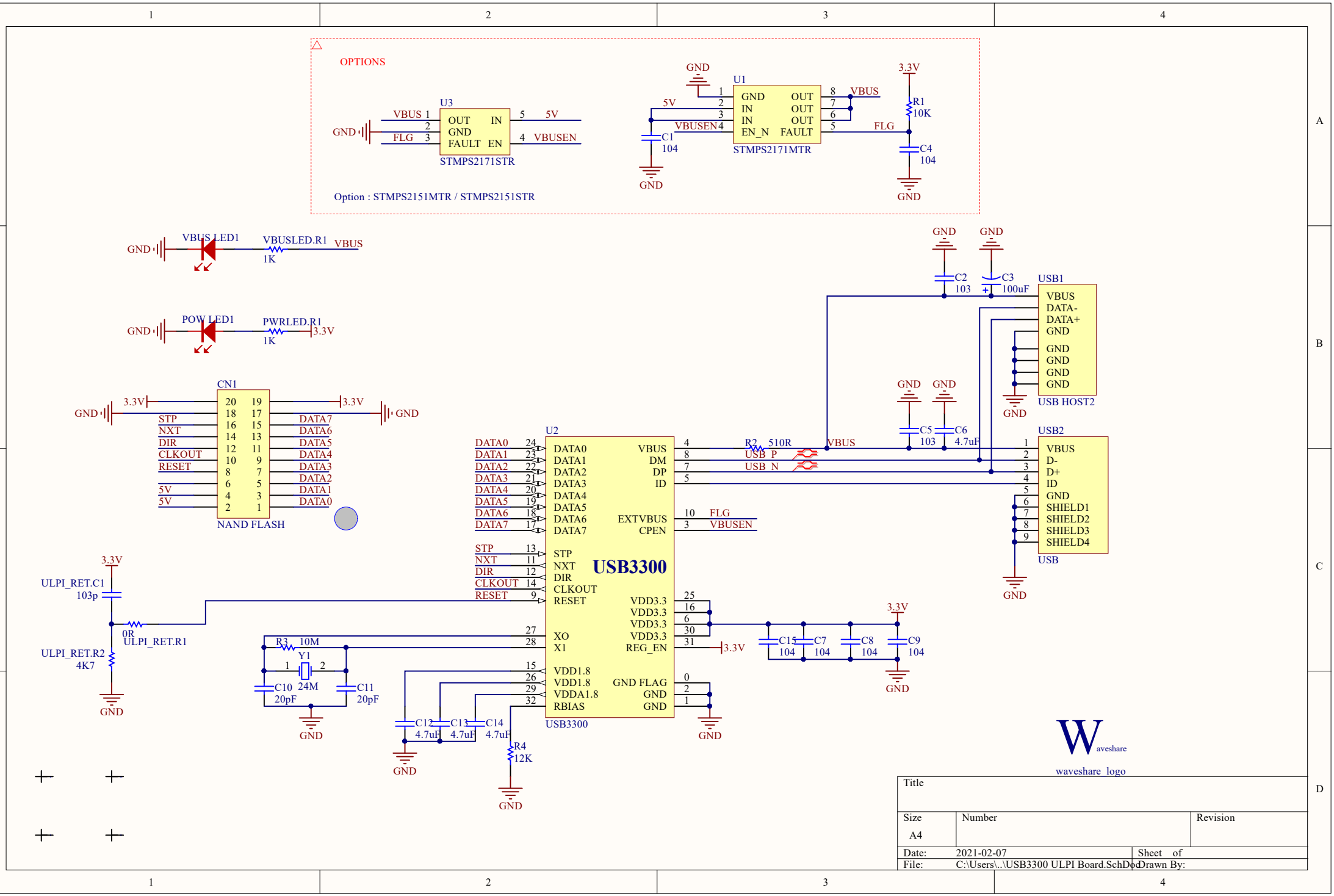
OPTIONS
U3
VBUS
FLG
OUT
GND
FAULT
IN
EN
5V
VBUSEN
STMPS2171STR
U1
GND
IN
IN
EN_N
OUT
OUT
OUT
FAULT
VBUS
FLG
STMPS2171MTR
C1
104
R1
10K
C4
104
3.3V
Option : STMPS2151MTR / STMPS2151STR
VBUS LED1
VBUSLED.R1
1K
POW LED1
PWRLED.R1
CN1
STP
NXT
DIR
CLKOUT
RESET
DATA7
DATA6
DATA5
DATA4
DATA3
DATA2
DATA1
DATA0
NAND FLASH
U2
USB3300
VBUS
DM
DP
ID
EXTVBUS
CPEN
VDD3.3
REG_EN
GND FLAG
VDD1.8
VDDA1.8
RBIAS
XO
X1
R2 510R
USB_P
USB_N
FLG
VBUSEN
C2
103
C3
100uF
C5
103
C6
4.7uF
USB1
USB HOST2
DATA-
DATA+
USB2
D-
D+
SHIELD1
SHIELD2
SHIELD3
SHIELD4
USB
ULPI_RET.C1
103p
ULPI_RET.R1
0R
ULPI_RET.R2
4K7
R3 10M
Y1
24M
C10
20pF
C11
20pF
C12
4.7uF
C13
4.7uF
C14
4.7uF
R4
12K
C15
104
C7
104
C8
104
C9
104
waveshare_logo
Title
Size
A4
Number
Revision
Date: 2021-02-07
Sheet of
File: C:\Users\..\USB3300 ULPI Board.SchDoc
Drawn By: