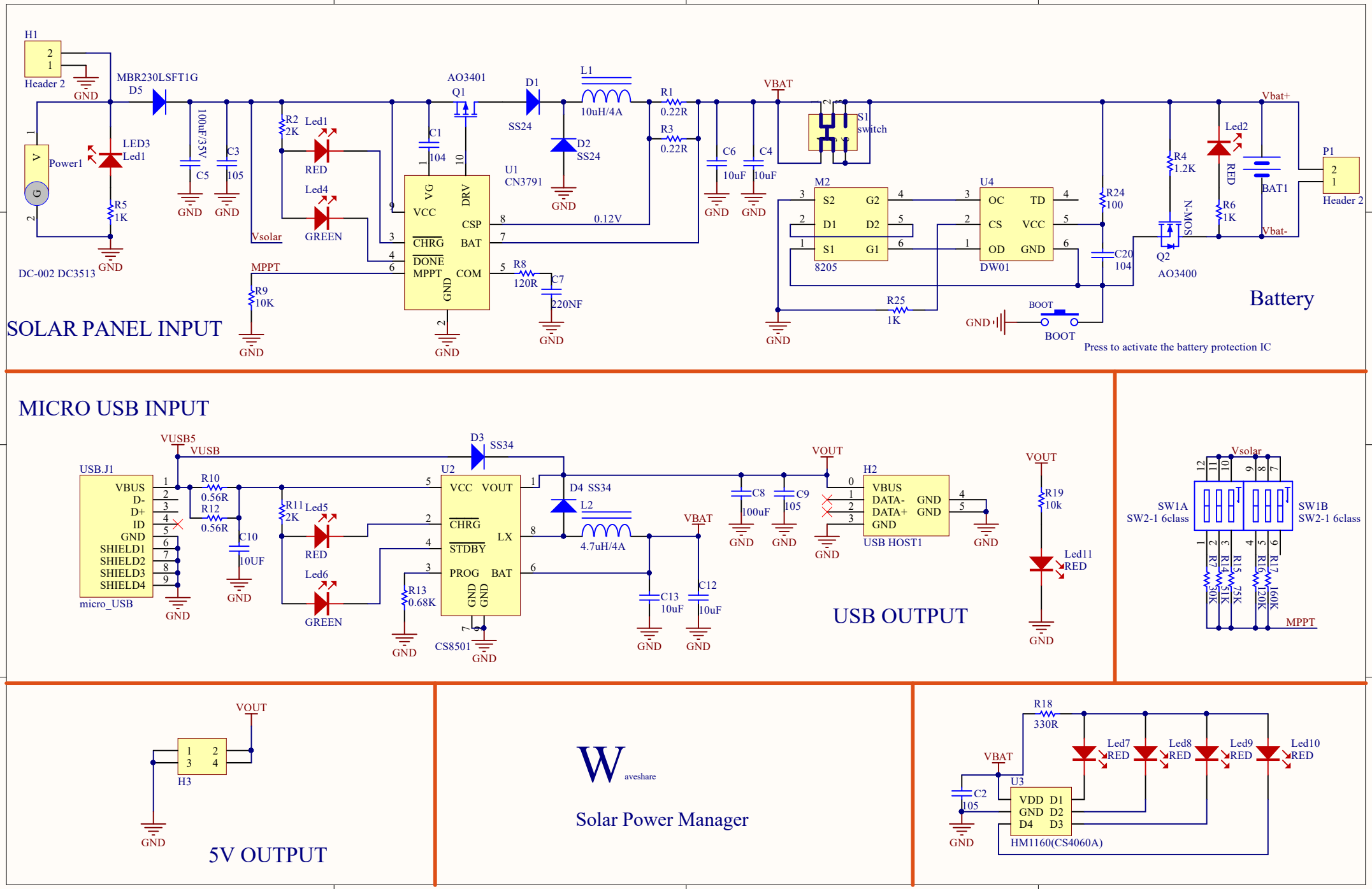
SOLAR PANEL INPUT
H1
Header 2
GND
MBR230LSFT1G
D5
LED3
Led1
Power1
DC-002 DC3513
R5
1K
100uF/35V
C5
C3
105
R2
2K
Led1
RED
Led4
GREEN
Vsolar
MPPT
R9
10K
AO3401
Q1
C1
104
U1
CN3791
VCC
VG
DRV
CSP
CHRG
BAT
DONE
MPPT
COM
GND
D1
SS24
L1
10uH/4A
D2
SS24
0.12V
R8
120R
C7
220NF
R1
0.22R
R3
0.22R
C6
10uF
C4
10uF
VBAT
S1
switch
M2
S2
G2
D1
D2
S1
G1
8205
U4
OC
TD
CS
VCC
OD
GND
DW01
R24
100
C20
104
R25
1K
BOOT
Press to activate the battery protection IC
R4
1.2K
Led2
RED
R6
1K
N-MOS
Q2
AO3400
Vbat+
Vbat-
BAT1
P1
Header 2
Battery
MICRO USB INPUT
USB.J1
VBUS
D-
D+
ID
GND
SHIELD1
SHIELD2
SHIELD3
SHIELD4
micro_USB
VUSB5
VUSB
R10
0.56R
R12
0.56R
C10
10UF
R11
2K
Led5
RED
Led6
GREEN
R13
0.68K
U2
VCC
VOUT
CHRG
STDBY
LX
PROG
BAT
GND
CS8501
D3
SS34
D4
SS34
L2
4.7uH/4A
C13
10uF
C12
10uF
C8
100uF
C9
105
VOUT
H2
VBUS
DATA-
DATA+
GND
USB HOST1
R19
10k
Led11
RED
USB OUTPUT
SW1A
SW2-1 6class
SW1B
SW2-1 6class
R7
30K
R14
51K
R15
75K
R16
120K
R17
160K
MPPT
H3
5V OUTPUT
Solar Power Manager
R18
330R
Led7
RED
Led8
RED
Led9
RED
Led10
RED
C2
105
U3
VDD
D1
GND
D2
D4
D3
HM1160(CS4060A)